GaAs MMIC

USER GUIDE

for

Storage, pick & place,

Die attach, wire bonding

Route Départementale 128 , B.P.46 - 91401 ORSAY Cedex - FRANCE
Tel.: +33 (0)1 69 33 03 08 - Fax : +33 (0)1 69 33 03 09

User guide for GaAs MMIC storage pick & place, die attach, and wire bonding

Table of contents

Introduction 3

Section 1 : MMIC storage 3
1-1 GEL-PAK® trays 3
1-2 Wafflepack trays 4
1-3 Plastic Films 4
1-4 Some references 5

Section 2 : Electrostatic discharge protection 6
2-1 Material classification 6
2-2 Basic principles for preventing ESD 7
2-3 Some references about ESD 10

Section 3 : MMIC handling and pick & place 11
3-1 Cleanliness 11
3-2 Electrostatic discharge protection 11
3-3 Handling 11
3-4 Transients 12
3-5 Die mechanical samples for practice 12
3-6 Some references about pick & place 12

Section 4 : Die attach 15
4-1 General recommendations 15
4-2 Epoxy die attach 16
4-3 Epoxy die attach control 18
4-4 Some references about epoxy 18
4-5 Eutectic die attach 19
4-6 Eutectic die attach control 20
4-7 Some references about eutectic die attach 20

Section 5 : Wire bonding 21
5-1 Bond pads 21
5-2 Bond wires 22
5-3 Bonding process 22
5-4 Bonding process control 23
5-5 Some references about wire bonding 24

Route Départementale 128 , B.P.46 - 91401 ORSAY Cedex - FRANCE
Tel.: +33 (0)1 69 33 03 08 - Fax : +33 (0)1 69 33 03 09

united monolithic semiconductors

User guide for GaAs MMIC storage pick & place, die attach, and wire bonding

Introduction

This document contains various informations and recommendations related to **UMS** GaAs products, storage, handling, mounting and bonding.

Important note: Some manufacturer references are given as complementary information in this user guide. They come either from **UMS** or from customer's experience. However they do not constitute a systematic "*best choice*" survey among the wide offer of the semiconductor industry.

Section 1: MMIC storage

Depending on the customer requirements, storage duration, pick & place method and equipment, MMIC can be shipped in different conditionings:

- GEL-PAK® trays
- Waffle packs
- Film on rings

Note on general storage conditions

GEL-PAK, Waffle-pack trays, and on-film wafers should be placed in a temperature and humidity controlled area, preferentially under a nitrogen flux.

1-1 GEL-PAK® trays

This is the standard UMS storage method. GEL-PAK® Vacuum Release Trays are membrane base trays that hold dies in place during shipping and handling, and release them only when required. The surface contact between the dies and the gel membrane on the tray surface has two independent modes.
In the "*Retention*" mode the surface contact is maximized and the dies are held firmly in place. In the "*Release*" mode the surface contact between the dies and the membrane is minimized; dies can then be easily removed by vacuum tools or tweezers.
Note that there is no constraint for positioning the dies on the tray. It is therefore possible for **UMS** to align precisely the dies on the tray when using an automatic pick & place equipment.
Standard GEL-PAK® trays used by **UMS** are black conductive (see ESD chapter).

Guidelines for using GEL-PAK® trays

Holding fixture: The tray should be well positioned on a vacuum plate designed to deliver vacuum to the underside of the tray. Most die attach equipment manufacturers offer fixtures for GEL-PAK handling and also stand alone stations (see section 1-4 for reference).

Route Départementale 128 , B.P.46 - 91401 ORSAY Cedex - FRANCE
Tel.: +33 (0)1 69 33 03 08 - Fax : +33 (0)1 69 33 03 09

Vacuum: Best results are obtained under good vacuum conditions, preferably in the range of 25 in.Hg or higher. The Gel membrane may appear to be in release mode even under relatively low vacuum conditions but full vacuum is necessary for optimal release.

Membrane tear: Gel membranes are relatively fragile and should be handled with care. If a membrane tears, then vacuum leakage at the tray will occur and this will inhibit die removal. In extreme cases, it may be necessary to temporarily repair the tear with a piece of tape.

Long term chip storage in GEL-PAK® trays

Although the GEL-PAK® tray is the UMS standard storage method, it is not recommended for long-term chip storage (typically greater than one year) due to the possible chemical interaction between the gel and the die backside metallization resulting in possible problems to attach properly the device.

1-2 Wafflepack trays

These trays contain several cavities matched to the die dimensions. The wafflepack is custom designed for each die type, moreover there is an additional space provided for die insertion and removal, depending on the pick & place tool. Therefore this space allows the dies to move during shipment and also during Wafflepacks handling. This may induce damages to the dies.
Standard wafflepack trays used by **UMS** are black conductive (see ESD chapter).
For some **UMS** catalog products, there is no standard tray available. In this case a minimum order of 2,000 trays is required by the manufacturer to develop a custom tray.

Long term chip storage in Wafflepacks

There is no limitation for long term storage in Wafflepacks since there is no chemical interaction between the tray and the chips. Therefore this is by far the best way to store the die for years providing that the Wafflepacks are stored in good conditions (See note on general storage conditions).

1-3 Plastic Films

These adhesive plastic films are used at the dicing process level and allow to keep a mechanical alignment of the dies during and after the process.
In order to save time and cost, UMS can ship wafers on film rather than dies on trays. In such a case, the standard UMS way of shipping is diced wafers on 7" rings, using an UV type film.
This film offers a highest adhesive strength until it is exposed to an UV lamp. The adhesive strength is typically reduced from 500g/25mm to 23g/25mm.The picking of the largest dies is in this case easier.
Other types of delivery can be considered on specific request.

Route Départementale 128 , B.P.46 - 91401 ORSAY Cedex - FRANCE
Tel.: +33 (0)1 69 33 03 08 - Fax : +33 (0)1 69 33 03 09

1-4 Some references (see note in introduction)

GEL-PAKâ trays

GEL-PAK®
756 North Pastoria Avenue
Sunnyvale, CA 94086
USA
1 : 408 733-1313
Fax: 1 408 730-1947
http://www.gelpak.com/

GEL-PAKâ vacuum stations

Reference :VRS-926

Wafflepack trays

ENTEGRIS, Inc.
3500, Lyman Boulevard
Chaska, Minnesota 55318
USA
Phone: 1 612 448-8181
Fax: 1 612 368-8022
http://www.ictray.com/

Plastic films and UV irradiators

ULTRON SYSTEMS, Inc.
5105 Maureen Lane
Moorpark, California 93021
USA
Phone: 1 805 529-1485
Fax: 1 805 523-1061
http://www.ultronsystems.com/

Route Départementale 128 , B.P.46 - 91401 ORSAY Cedex - FRANCE
Tel.: +33 (0)1 69 33 03 08 - Fax : +33 (0)1 69 33 03 09

Section 2: Electrostatic discharge protection

High frequency GaAs devices are usually not equipped with on-chip ESD (Electrostatic Discharge) protection circuitry as the overall performance is degraded by additional parasitic effects. To address higher operating frequency, the gate length and the gate periphery are decreasing. MMICs are thus more and more sensitive to ESD degradation or failure. Depending on the port characteristics, circuits can be damaged by ESD voltages in the 100-1000 volts range, classifying these products in Class 0. However, observing the same standard rules as the ones used for silicon devices handling, proves to be efficient to protect GaAs devices from ESD degradation.

2-1 Material classification

Regarding ESD, materials can be classified in four families:

- Conductive: Mainly metals or plastic including conductive carbon.
  Surface resistivity: 10^3 to 10^6 Ω/square
  Volume resistivity: 10^2 to 10^5 Ωxcm
  Isolated conductive materials can retain charge, so they should be connected to ground to eliminate surface and volume charge. However to limit the discharge current amplitude, the ground connection resistance should be in the range of 7.10^5 to 10^6 Ω

- Electrostatic dissipative: Plastic including a small proportion of carbon, highly polished or humidified materials.
  Surface resistivity: 10^6 to 10^9 Ω/square
  Volume resistivity: 10^5 to 10^{11} Ωxcm
  This materials allow the transfer of charge to ground. They are quasi "ideal" since they do not generate charge and there is no risk of sudden discharge because the charge transfer to ground takes longer than with conductive material.

- Electrostatic low charging (formerly astatic or antistatic): Plastic with low conductive carbon, epoxy, paper, lubricated or humidified materials.
  Surface resistivity : 10^9 to 10^{12} Ω/square
  Volume resistivity : 10^8 to 10^{11} Ωxcm

These materials generate charges by rubbing which are not eliminated by grounding. Moreover they can loose their characteristics with time or under UV exposure.

- Insulating: PTFE, PVC, nylon, polyethylene, polycarbonate, plexiglas etc ..
  Surface resistivity: $>10^{12}$ Ω/square
  Volume resistivity: $> 10^{11}$ Ωxcm
  To be avoided in the sensible areas.

Route Départementale 128 , B.P.46 - 91401 ORSAY Cedex - FRANCE
Tel.: +33 (0)1 69 33 03 08 - Fax : +33 (0)1 69 33 03 09

2-2 Basic principles for preventing ESD

The main basic principles for preventing ESD are:

- Avoid charge sources
- Eliminate surface charge
- Eliminate volume charge
- Neutralize residual charge
- Control humidity level
- Identify ESD sensible products, areas and equipments
- Develop and maintain an ESD Control Program

These principles should be applied to infrastructures (floor, furnitures), personnel, equipment, tooling, and packing.

Charge sources: It is important to eliminate as much as possible all insulating material close to the sensitive devices.

Floor: A conductive/dissipative floor is a key point in the ESD protected working areas, especially when personnel mobility is necessary. For economical reasons, it is possible to implement ESD protective mats only on the walking surface of each workstation. In this case, sensitive devices should be protected during transport between different workstations by conductive static shields such as silver colored bags or black conductive boxes.

Furniture: Cabinets, cupboards and worktables should be dissipative and connected to an effective ground. It is also possible to use non-dissipative materials and to cover them with a dissipative material with a ground connection resistance in the range 7.10^5 to 10^6 Ω. Chairs and trolleys should be grounded to a conductive/dissipative floor or mat through conductive casters.

Personnel: In most cases, people are the most important cause of ESD. Human body is at the same time conductive and isolated. Moreover, it is capacitive (~ 150pF). Walking on an isolated floor or moving on a chair are sufficient to generate several thousands of volts particularly in dry environments.
Grounding the body is a key preventive factor. It limits the voltage difference with all other grounded equipment, thus minimizing the discharge risks. It also prevents static charge accumulation on the person. If possible, a permanent connection to ground is recommended by the association of dissipative shoes and conductive floor. For working areas non equipped with conductive floor, the personnel should wear systematically wrist straps, a ground cord including a current limiting resistor (typically 1MΩ, ¼W) connected to a specific cuff present on the work table or the equipment. Avoid as much as possible alligator clips or equivalent temporary connection systems.
Work clothes should be at minimum electrostatic low charging and better dissipative.

Workstations and tooling: When handling sensitive devices, workstations should be the ESD protective center, which provides a common ground, point to equipment, tooling and personnel. Several groundable points should be available for additional personnel.

Route Départementale 128 , B.P.46 - 91401 ORSAY Cedex - FRANCE
Tel.: +33 (0)1 69 33 03 08 - Fax : +33 (0)1 69 33 03 09

Worksurfaces should be covered with a dissipative material connected to the common ground point with a resistance in the range 7.10^5 to 10^6 Ω. Each workstation should be identified as sensitive area with appropriate symbols (see identification)
Hand tools not electrically powered are grounded either by the worksurface when not in use or by the grounded user.

Packing: As already mentioned, chips are shipped in conductive boxes which protect them only inside ESD sensitive areas because these boxes are handled by grounded personnel. Between these areas and particularly during shipment and before their use, the conductive material may be sensitive to ESD coming from non-grounded tooling or personnel. To prevent this, the boxes should be protected by static shielded bags that include a static layer and a dissipative layer. This combination protects from static charge generation, conductive discharge and electromagnetic field.

Residual charge neutralization: Ionization is a way to remove the residual charge from insulators and also isolated conductive or dissipative materials that cannot be grounded. The principle is to use ionized air surrounding these objects to neutralize this charge. Ionizers can be implemented as parts of the air flow systems even in clean rooms. Gun ionizers can also be used on Workstations for intermittent use.
Air ionizers should not replace the classical grounding methods but should be used in complement to them.

Humidity control: The relative humidity (RH) level has a great influence on the charge stored by electrostatic materials. For instance the voltage generated by an operator walking on an isolated floor which is 35kV under 35% RH drops to 15kV under 60% RH and 1.5kV under 80% RH.
Whenever possible, a 50% RH is recommended for limiting ESD risks.

Identification of ESD sensible products, areas and equipment: All sensible areas (entrance, way out, limits), should be clearly identified with normalized panels and floor marks. The ground common points, sensible products, protective boxes, and protective material (mats, chairs, wrist straps etc.) should be identified by normalized symbols. See for example the symbols recommended by the *ESD Association Standard ANSI EOS/ESD S.1-1993.*

ESD protected area symbol

Route Départementale 128 , B.P.46 - 91401 ORSAY Cedex - FRANCE
Tel.: +33 (0)1 69 33 03 08 - Fax : +33 (0)1 69 33 03 09

User guide for GaAs MMIC storage pick & place, die attach, and wire bonding

ESD Susceptibility Symbol

ESD Protective symbol

ESD Control Program: In complement to the ESD protective handling procedures and material, an ESD Control Program should be implemented to ensure that:

- Personnel is correctly trained, including management,
- After installation, the protective equipment is compliant with the ESD standards,
- The protective equipment keeps its protective capability versus time.

Some controls can be done by trained people (wrist straps, shoes) on a daily basis while some others require qualified personnel (floor, furniture, work clothes, ionizers etc.) It may be also cost effective to use existing continuous controllers which monitor the protective characteristics of the workstation hardware: mats, wrist straps, common ground point.

Route Départementale 128 , B.P.46 - 91401 ORSAY Cedex - FRANCE
Tel.: +33 (0)1 69 33 03 08 - Fax : +33 (0)1 69 33 03 09

2-3 Some references about ESD (see note in introduction)

Vendors of ESD products and equipment, see ESD Journal

http://www.esdjournal.com/products/products.htm

ESD standards, see Electrostatic Discharge Association

http://www.esda.org/

Route Départementale 128 , B.P.46 - 91401 ORSAY Cedex - FRANCE
Tel.: +33 (0)1 69 33 03 08 - Fax : +33 (0)1 69 33 03 09

Section 3: MMIC handling and pick & place

Pick & place refers to the operation of transferring the die from a tray or film to a package, module or board before die attach. This process can be done manually or by means of an automatic equipment. In both cases, due to the fragility of bare dies, it is important to note the following key points:

3-1 Cleanliness

Dies must be handled in a clean environment; chip and wafer containers must not be opened and exposed outside of dedicated mounting areas. Ideally, under a laminar flow in clean rooms class 10000 or better.

3-2 Electrostatic discharge protection

See section 2

3-3 Handling

For prototyping and small production, dies can be picked up and placed manually whereas for high volumes, automatic pick & place machines achieve a better placement accuracy and productivity.
Manual handling: Chips can be handled using clean stainless tweezers. Models from Dumont or Fontax (see references) are recommended. To avoid mechanical degradations to the chip upper edge it is preferable to pick the chip as indicated hereafter.

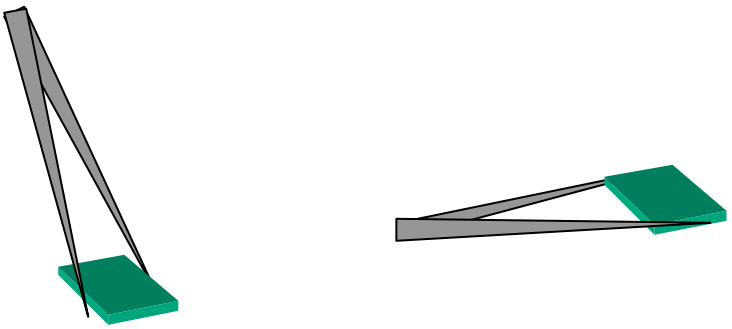

NO YES

Recommended chip picking procedure with tweezers

Route Départementale 128 , B.P.46 - 91401 ORSAY Cedex - FRANCE
Tel.: +33 (0)1 69 33 03 08 - Fax : +33 (0)1 69 33 03 09

Vacuum probes: Instead of using tweezers, vacuum wands can be used with appropriate PTFE or Delrin tips adapted to the die periphery.

Air bridges: Most of **UMS** chips are using air-bridge technology. To protect the chip surface during pick & place operations, the MMIC designer systematically implements 4 to 6 support areas at the periphery of the chip. These support areas are constituted by stacking all the metal and dielectric layers. This insures that the pick-up tools will contact the support areas first, providing that the tip size is adapted to the chip periphery.

Automatic pick & place: Automatic pick & place machines can pick-up directly the chips from GEL-PAK® trays, Waffle-packs or adhesive films. The body of the pick-up tools (the shank) is specific to each equipment while the tip is adapted to the chip geometry and the chip conditioning:

- Conical tips
- Rectangular tips
- Peripheral tips (to minimize the contact area with the tool)
- Pyramid die collets (no contact with the top of the chip)

In the case of die picked directly from wafers, the chip is simultaneously pushed up through the adhesive film by a specific die ejector pin.

3-4 Transients

Voltage surges and transients coming out from power supplies and instrumentation hardware should be prevented. Galvanic insulation of hardware through transformers also protects chips from main spikes. A particular attention should be paid to avoid ground loops that could result in a ground floating effect of volts to tens of volts. All parts of hardware close to sensitive devices should be carefully checked to be at 0V referred to ground (AC and DC) during all working phases of these equipments. All electrically powered equipments or tools should be powered through a grounded type AC plug.

3-5 Die mechanical samples for practice

UMS can ship mechanical (non-functional) chips for pick & place practice. Please consult our Sales Department for more details.

3-6 Some references about pick & place (see note in introduction)

Tweezers

http://www.emsdiasum.com/ems/tweezers/fontax.html

Route Départementale 128 , B.P.46 - 91401 ORSAY Cedex - FRANCE
Tel.: +33 (0)1 69 33 03 08 - Fax : +33 (0)1 69 33 03 09

FONTAX® Technologies SA
P.O. Box 159
CH-1008 PRILLY/Lausanne
Switzerland
Phone: 41 21 625 84 33
Fax: 41 21 625 18 35
http://www.chez.com/fontax/

Vacuum wands, tips

H-SQUARE Corporation
1033 North Fair Oaks Avenue
Sunnyvale, CA 94089-2101
USA
Phone: 1 408 734-2543
Fax: 1 408 734-1132
http://www.h-square.com/

Pick-up tools

SPT Roth Ltd
Business Unit Aprova
Fabrikstrasse 23
CH-3250 Lyss
Switzerland
Phone 41 32 387 80 80
Fax 41 32 387 80 88
http://www.smallprecisiontools.com/

Pick & place equipment

Micro Robotics Systems, Inc (MRSI)
101 Billerica Ave, Bldg.3
N. Billerica, MA 01862-1256
Phone 1 978 667 9449
Fax 1 978 667 6109
http://www.mrsigroup.com/

Semiconductor Equipment Corporation
P.O. Box 8079
5154 Goldman Ave.
Moorpark, California 93020-8079
Phone: 1 805 529 2293
Fax: 1 805 529 2193

Route Départementale 128 , B.P.46 - 91401 ORSAY Cedex - FRANCE
Tel.: +33 (0)1 69 33 03 08 - Fax : +33 (0)1 69 33 03 09

User guide for GaAs MMIC storage pick & place, die attach, and wire bonding

http://www.semicorp.com/

West-Bond Inc
1551 Gene Autry Way
Anaheim, CA 92805
Phone: 1 714 978 1551
Fax: 1 714 978 0431
http://www.westbond.com/

Route Départementale 128 , B.P.46 - 91401 ORSAY Cedex - FRANCE
Tel.: +33 (0)1 69 33 03 08 - Fax : +33 (0)1 69 33 03 09

Section 4: Die attach

4-1 General recommendations

To attach the chips to their external environment, a substrate or a metal base, two methods are generally indicated, depending mainly on the thermal dissipation requirements of the device:

- Epoxy die attach for low power devices
- Eutectic die attach for medium and power devices.

Note that some new families of Ag loaded organic adhesives have a typical thermal conductivity of 30-60W/m°K compared to 2-3 W/m°K for classical epoxies; however this is still low, compared to the conductivity of 80/20 Au/Sn Eutectic and this technique should be limited to medium power devices in a low sensitive temperature environment.

These methods are compliant with the **UMS** chip backside technology (4µm gold plating) which is common to most of the **UMS** processes.
Die attach on a metal base: This is the recommended best solution to achieve at the same time a good RF grounding and thermal heatsinking. (see picture below). The base plate should be preferentially gold plated copper or copper composite. The die can be attached by epoxy or eutectic.

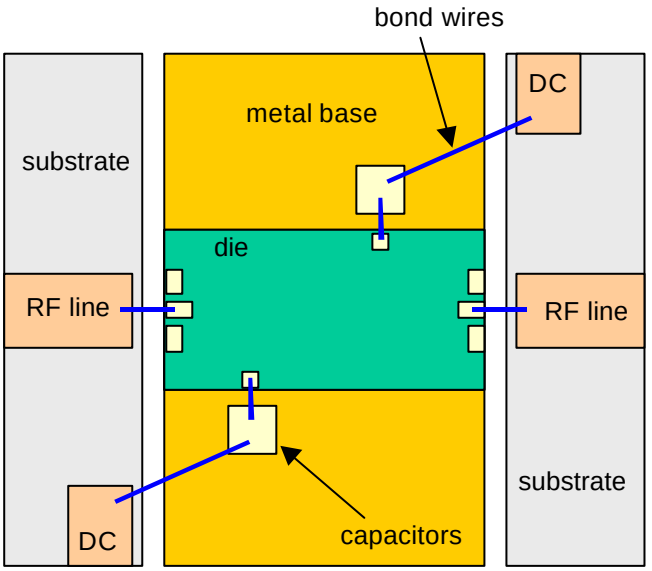

Typical die attach on a metal base

Route Départementale 128 , B.P.46 - 91401 ORSAY Cedex - FRANCE
Tel.: +33 (0)1 69 33 03 08 - Fax : +33 (0)1 69 33 03 09

Die attach on a substrate: Reserved to low power devices this option should include via holes through the substrate and under the chip to provide a low RF ground inductance and avoid undesirable non TEM propagation modes and spurious oscillations (see picture below).

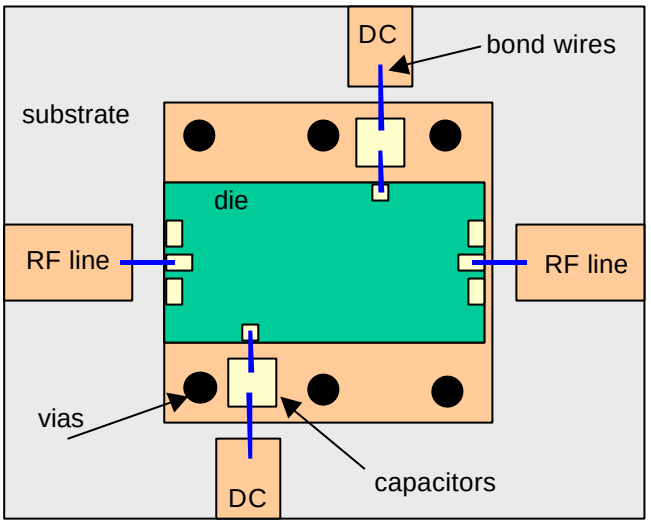

Recommended die attach on a substrate

4-2 Epoxy die attach

This is the industry standard die attach method. It is based on a Van der Waals interaction rather than atomic or molecular. An adhesive paste composed of two components, silver grains filled epoxy and a hardener, is deposited in liquid form on a clean surface, which may be a metal or an insulating substrate. For proper grounding in RF applications, the epoxy should be electrically conductive and generally the chip should be attached directly on the carrier which can be a metal or a ground pad connected to the base plate with via holes through the substrate.

The silver epoxy can be shipped in two different conditionings:

- One-component epoxy (hardener and epoxy with silver grains are premixed). This is a ready to use product. However, to slow-down the epoxy polymerization which causes a viscosity shift, the one-component should be kept at –40°C. In these conditions, the average maximum life time is 6 months.

- Two-component epoxy which has to be mixed prior to the attach process. However this epoxy can be stored at room temperature and its average lifetime is 1 year.

Route Départementale 128 , B.P.46 - 91401 ORSAY Cedex - FRANCE
Tel.: +33 (0)1 69 33 03 08 - Fax : +33 (0)1 69 33 03 09

Epoxy die attach process

Step 1: Epoxy preparation: In case of a two-component epoxy, it is necessary to realize the mixing of the two components. The procedure is explained in the epoxy manufacturer instruction guide. The mixing is generally 1:1 in weight in a clean and dry environment.
The one-component epoxy can be used as it is, however it is important to wait until the container be at room temperature and remove any moisture before opening it.

Step 2: Cleaning
Clean the dispensing equipment and the chip carrier (metal or substrate) with Alcohol to eliminate all the possible contaminants. This is a key point for a good attach process.

Step 3: Epoxy application: Epoxy can be applied by needle dispensing, screen printing or print stamping.
It is important to minimize the thickness of epoxy to keep the thermal conductivity and avoid the risk of short-circuit by overflow on the top of the chip. The epoxy thickness should be uniform without gaps and air bubbles. The optimum epoxy thickness for **UMS** 100µm thick chips is around 15-20µm. The size of the epoxy drop should be just larger than the chip with a narrow fillet around after contact.
The drop shape should be spread out, indicative of the good quality of the epoxy wetting. (See hereafter)

Shape of epoxy drop after dispensing

It is possible also to use an automatic dispensing equipment. Many pick & place machines have the capability to dispense epoxy, (see references in Section 3) with the advantages of accuracy, control and repeatability of the epoxy drops.

Step 4: Chip positioning: The chip should be directly positioned at its final position and slightly pressed with the adequate tips described in Section 3. The epoxy should not encroach the top surface of the die.

Step 5: Cure: The curing process is necessary to polymerize the epoxy and stabilize the die attach. This can be done in stand alone conventional ovens. Curing cycle time is dependent

Route Départementale 128 , B.P.46 - 91401 ORSAY Cedex - FRANCE
Tel.: +33 (0)1 69 33 03 08 - Fax : +33 (0)1 69 33 03 09

on the epoxy used and is described in the epoxy manufacturer instruction guide. **UMS** recommended curing process is 1 hour @150°C, which is compliant with many epoxies.

4-3 Epoxy die attach control

See section 4-6: Eutectic die attach control

4-4 Some references about epoxies (see note in introduction)

Mil reference

MIL-STD-883 TM5011: "Evaluation and Acceptance procedures for Polymeric Adhesives"

Standard electrically conductive epoxies

EPO-TEK H20E from EPOXY TECHNOLOGY Inc.

14 FORTUNE DRIVE
Billerica, MA 01821
USA
Phone : 1 508-667-3805
Fax : 1 508-663-9782
http://www.epotek.com/

ABLEBOND 84-1LMI from ABLESTIK

20021 SUSANA ROAD
Rancho Domingez, CA 90221
USA
Phone : 1 310-764-4600
Fax : 1 310-764-2545
http://www.ablestik.com/

High thermal conductivity epoxies

DM6030Hk from DIEMAT Inc.

458 Boston Street
Topsfield, MA 01983
USA
Phone: 1 978-887-5039
Fax: 1 978-887-2122
http://www.diemat.com/

QMI 5030 from DEXTER Electronic Materials

9938 Via Pasar
San Diego, CA 92126

Route Départementale 128 , B.P.46 - 91401 ORSAY Cedex - FRANCE
Tel.: +33 (0)1 69 33 03 08 - Fax : +33 (0)1 69 33 03 09

USA
Phone: 1 858-695-1716
Fax: 1 858-695-0951
http://www.dexelec/

Epoxy die attach equipment (die bonders)

Micro Robotics Systems, Inc (see section 1-4)
ULTRON SYSTEMS, Inc. (see section 1-4)
Semiconductor Equipment Corporation (see section 1-4)
West-Bond Inc (see section 1-4)

4-5 Eutectic die attach

This process, recommended for power devices is however more difficult to control than the classical epoxy attach. This is really a soldering joining process involving intermetallic interaction. As already mentioned, most of **UMS** chips have a 4µm gold backside compatible with the eutectic attach.
UMS recommended process is 80/20 Au/Sn under a dry nitrogen or a 90/10 nitrogen/hydrogen flow to prevent oxide formation. It can be used on gold plated carriers like copper, brass, molybdenum, etc.

Process description

Step 1: Preform preparation: Gold/Tin 80/20 alloyed preforms are used as interfaces between the die and its carrier. For large volume production, the preforms can be shipped directly compatible with die size, ready to use. They are also available in stripes and in this case, have to be cut according to the die size. The recommended preform size is slightly smaller than the die to be attached. The preferable preform thickness is 25µm.
In any case, all preforms should be stored in a dry nitrogen and temperature controlled atmosphere and regularly tested on a sample basis with mechanical dies.

Step 2: Cleaning and drying: Any type of contaminant should be eliminated by a careful cleaning of the carrier, the preforms and all the used tools. Finish the cleaning with a dry spray.

Step 3: Manual die attach: Set up the heater plate station at a temperature of about 15 to 20°C higher than the maximum melting temperature of the alloyed preform used for the soldering process because the temperature of the top of the carrier is generally lower than the temperature indicated by the heater plate station due to thermal loss between the heater plate and the carrier. A direct temperature measurement close to the die attach location may be useful to correct the temperature setting of the heater plate.
Place the carrier on the heater plate and wait for carrier temperature stabilization. If a 90/10 nitrogen/hydrogen flow on the carrier surface is used, no flux is needed, otherwise apply a drop of flux on the future location of the chip with the tip of a metallic rod.
Place the preform at the right position with tweezers, wait for preform melting and scrub slightly the die on the preform with another pair of tweezers until wetting occurs. Scrubbing

Route Départementale 128 , B.P.46 - 91401 ORSAY Cedex - FRANCE
Tel.: +33 (0)1 69 33 03 08 - Fax : +33 (0)1 69 33 03 09

refers to a technique that consists in doing tiny circular movements with the MMIC, by keeping its orientation, and in the same time, in leaning the MMIC against the carrier. Scrubbing is necessary in order to spread the liquid alloy on the whole backside surface of the MMIC and perform a good mechanical contact. Scrubbing time should be limited to 5 seconds.
In any case, the die should not be maintained at a temperature greater than 320°C for more than 20 seconds.

Step 4: Carrier cooling: Remove the carrier from the hot heater plate and leave it on a metallic surface at room temperature for the alloy solidification. To avoid thermal shocks to the carrier, it is also possible to use an intermediate hot plate at 120-130°C.

4-6 Eutectic die attach control

The die attach process can be considered as successful if the following criteria are met:

- The solid alloy is bright.
- An alloy fillet is visible at least under three of the four sides of the die.
- There is no risk of backside to front side short-circuit resulting from an excessive alloy thickness.

Main common problems in eutectic die attach are linked to a contamination of the chip carrier, the preform or the die backside caused by an improper cleaning (see step 2) or a non-clean environment.

A regular test of die shear strength should be completed to validate the die attach process control versus time. It should be also completed after any important modification of the process or change in the hardware. This testing is described in MIL-STD-883 method 2019.5.
Note that UMS performs a die shear test to check the wafer backside quality on a sampling basis.

4-7 Eutectic die attach references

80/20 AuSn alloys

W. C. Heraeus GmbH & Co.
KG Heraeusstrasse 12-14
D-63450 Hanau
Germany
Phone : + 49- 6181 35 52 65
Fax : + 49- 6181 35 877
http://www.4cmd.com/

Eutectic die attach equipment (die bonders)

Route Départementale 128 , B.P.46 - 91401 ORSAY Cedex - FRANCE
Tel.: +33 (0)1 69 33 03 08 - Fax : +33 (0)1 69 33 03 09

User guide for GaAs MMIC storage pick & place, die attach, and wire bonding

Same as in section 4-4

Route Départementale 128 , B.P.46 - 91401 ORSAY Cedex - FRANCE
Tel.: +33 (0)1 69 33 03 08 - Fax : +33 (0)1 69 33 03 09

Section 5: Wire bonding

Even if flip-chip bonding is doing considerable progress, wire bonding is still the most popular way to interconnect dies with the external environment, package or substrate. Automatic wire bonders have an accuracy and repeatability compatible with millimeter-wave requirements.

5-1 Bond pads

UMS die bond pads are fully compatible with manual and automatic gold wire bonders. The bond pads are metallized with 3.5µm electroplated pure gold. Bond pads size is generally 100x100µm for DC/low frequency RF signals and generally 72x122µm (which is part of a 50 ohms line), for microwave signals. To prevent from stress effect possibly induced by the bonding process, UMS chip design rules specify a 25µm prohibited zone for circuit layout close to the bond pads and an additional 25µm zone authorized for non-sensible components.

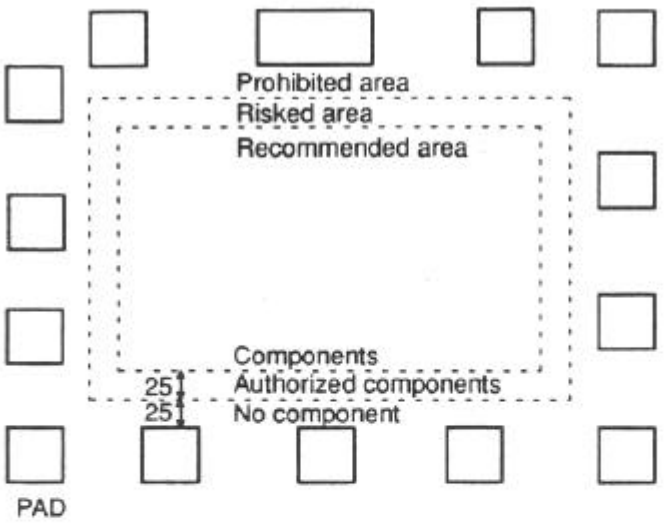

Prohibited area : No component must be drawn here except EL connections.

Risked area : Components must be drawn here, only if it is not possible to place them in the *recommended area*.

Recommended area : components must be drawn here.

Route Départementale 128 , B.P.46 - 91401 ORSAY Cedex - FRANCE
Tel.: +33 (0)1 69 33 03 08 - Fax : +33 (0)1 69 33 03 09

User guide for GaAs MMIC storage pick & place, die attach, and wire bonding

Bond pads and circuit component safety distance

Route Départementale 128 , B.P.46 - 91401 ORSAY Cedex - FRANCE
Tel.: +33 (0)1 69 33 03 08 - Fax : +33 (0)1 69 33 03 09

5-2 Bond wires

Among the wide choice of bonding wires or ribbons to connect MMICs to substrates, the most commonly used are pure gold with 25µm diameter. This is a quasi standard and most of the designs are taking into account the inductance effect of the bonding wires in the final chip performance.
During the chip design phase, unless otherwise stated in the product data-sheets, it is assumed that the device RF ports are connected to the external environment by a pure inductor with a typical value of 0.10 to 0.15nH. For a single 25µm wire, this is equivalent to a typical length of 0.12 to 0.19mm. It is therefore recommended to avoid longer bonding wires to save the chip performance.

5-3 Bonding process

Although ultrasonic wire bonding is very popular in the laboratories, thermocompression wire bonding is the preferred method for industry. It uses a combination of heat and pressure to connect the wire between the die bond pad and the external substrate. The bond comes about by the interaction of atomic forces between the wire and the pad metal, which means no melting between both metals, occurs.

Thermocompression wedge bonding: A very hard heated wedge-bonding tip (tungsten carbide) is used with a wire spool equipped with a wire clamp. The wire is pressed on the bond pad with a controlled force. (20 to 22 grams recommended). This process requires a precise adjustment of the tool force, work stage and tip temperatures. Two separate alignments are necessary which limits the bonding speed. Moreover the process is slow because the bonding wire has to be moved exactly under the tool end.

Advantages of the wedge bonding:

- Very small footprint (1.5 to 2 times the wire size)
- Shortest bonds between the die pad and the external substrate
- Capability to bond small diameter wires (18µm)

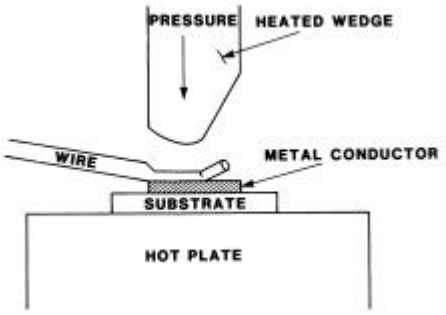

Thermocompression wedge bonding (after G. Ginsberg)

Route Départementale 128 , B.P.46 - 91401 ORSAY Cedex - FRANCE
Tel.: +33 (0)1 69 33 03 08 - Fax : +33 (0)1 69 33 03 09

Thermocompression ball bonding: Most commonly used due to its high rate production capability. The wire is fed through a capillary which is heated between 300 and 400°C. A hydrogen flame or a spark discharge is produced at the end of the tool to melt the end of the wire and form a small ball. The tool moves until it is exactly above the bond pad of the die. Then the tool presses vertically the ball on the pad and the right physical process is realized to achieve a good attach between the bonding wire and the die bond pad. The wire cutoff is achieved by a flame-off or spark-off operation, which also forms a new ball for the next bond.
The recommended ball bonding force is 30 to 50 grams.
Due to the gold ball size, the footprint size is between 3 to 5 times the wire diameter size.

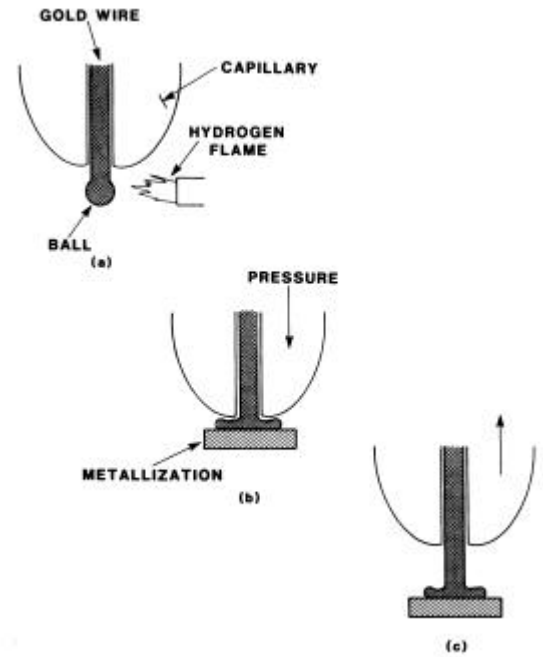

Thermocompression ball bonding (after G. Ginsberg)

Advantages of the ball bonding:

- Omnidirectional motion of the bonding tool after the first bond
- Fast bonding method because the bonding wire is fed directly under the tool end
- Process easier to control

5-4 Bonding process control

A regular control of bonding process should be completed to validate the die attach process control versus time. It should be also completed after any important modification of the process or change in the hardware. The most common wire bond pull test uses a small hook

Route Départementale 128 , B.P.46 - 91401 ORSAY Cedex - FRANCE
Tel.: +33 (0)1 69 33 03 08 - Fax : +33 (0)1 69 33 03 09

which pulls the bonded wire at its center. The test may be destructive on non-destructive.
This testing is described in MIL-STD-883 method 2011 (destructive pull test) and MIL-STD-883 method 2023 (non-destructive pull test)
Note that UMS performs a bond pull test to check the front side bond pads quality on a sampling basis.

5-5 Some references about wire bonding

Bonding wires

American Fine Wire Corporation
907 Ravenwood Drive
Selma Alabama 36701
USA
Phone: 1 334 875 4040
Fax: 1 334 874 7119
http://www.kns.com/

Wire bonders

Kulicke & Soffa Industries, Inc
2101 Blair Mill Road
Willow Grove, Pennsylvania 19090
USA
Phone: 1 215 784 6000
Fax: 1 215 659 7588
http://www.kns.com/

West-Bond Inc (see section 1-4)

Route Départementale 128 , B.P.46 - 91401 ORSAY Cedex - FRANCE
Tel.: +33 (0)1 69 33 03 08 - Fax : +33 (0)1 69 33 03 09